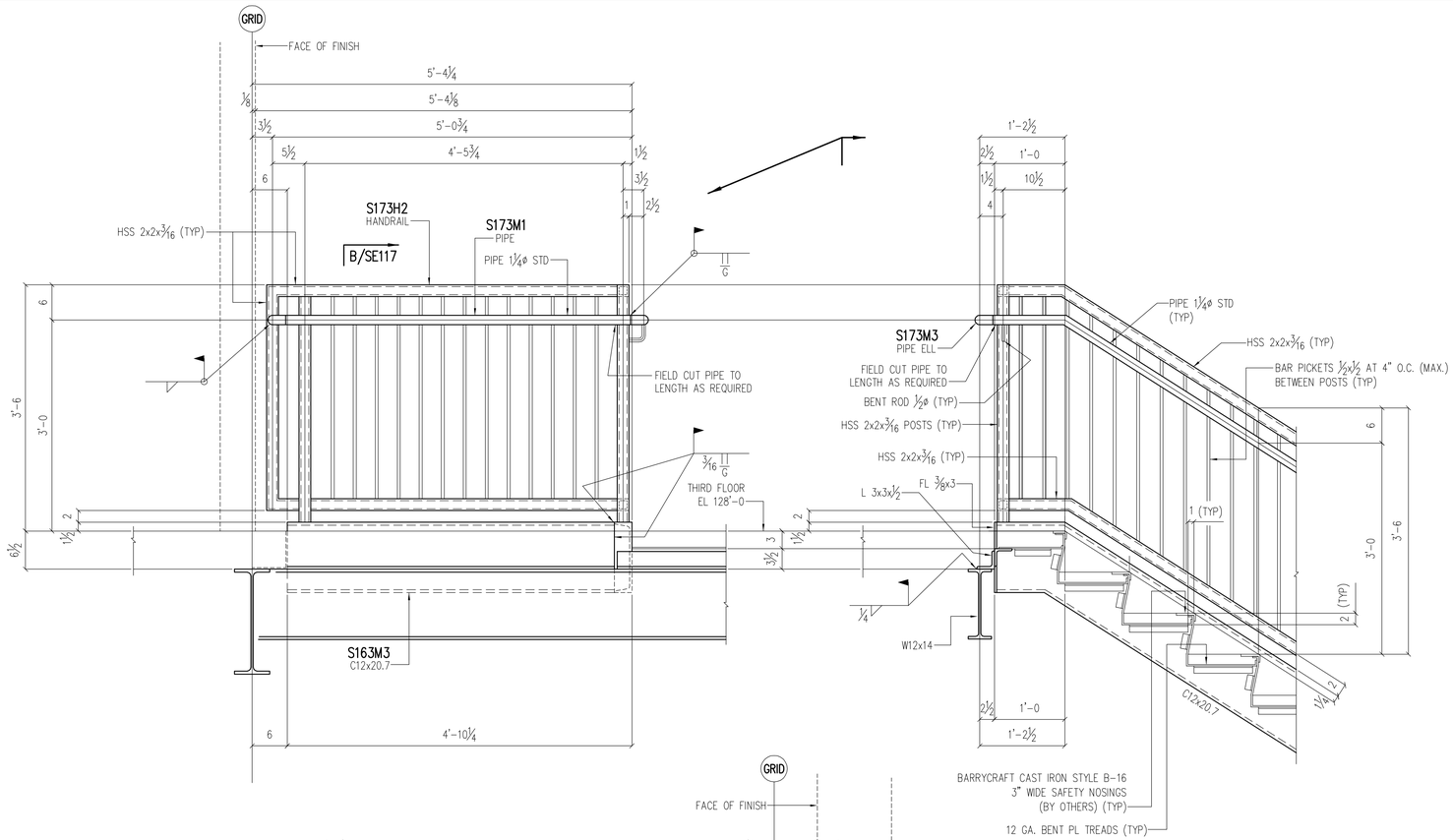

SECTION A/SE117

[SE111]

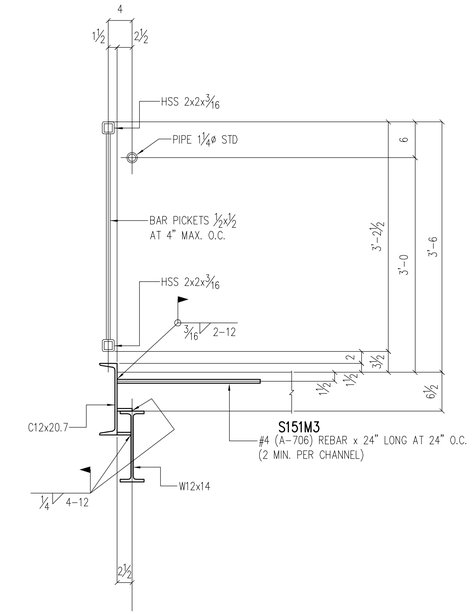

SECTION B/SE117

[SE111, SE117]

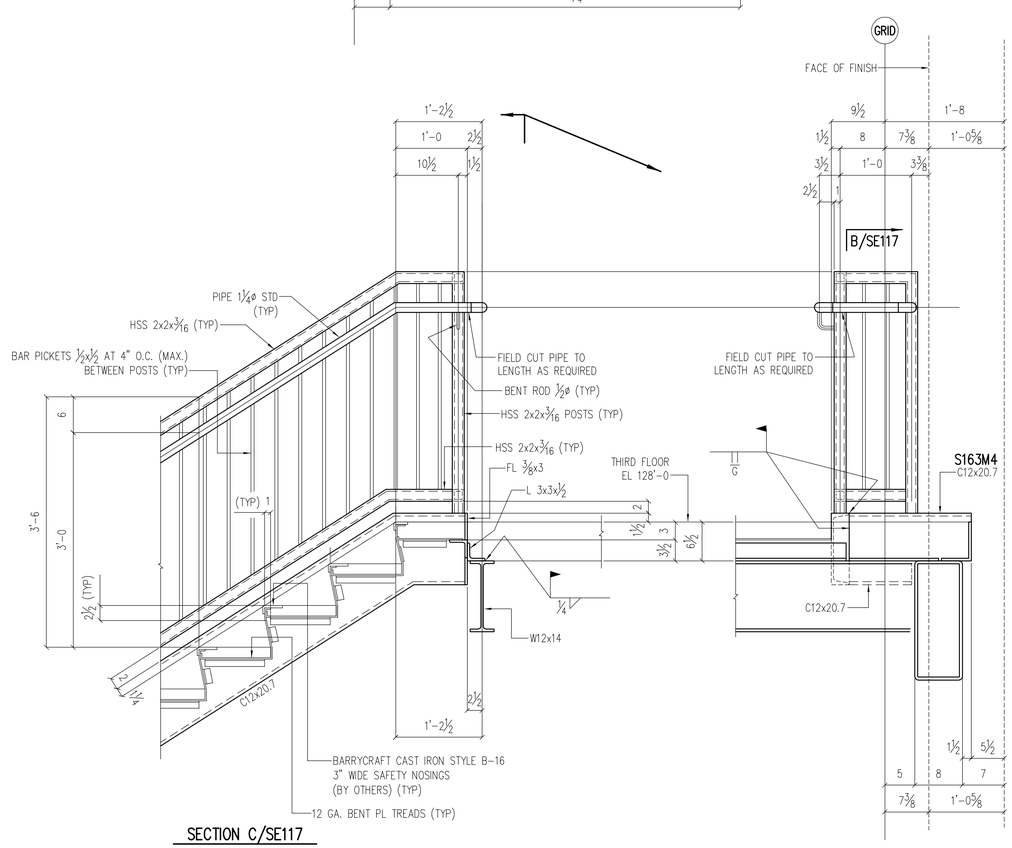

SECTION C/SE117

[SE111]

STAIR NOTES

STRINGERS = C12x20.7
HEADERS = HSS 7x4x⅜
TREADS = 12 GA. PL W/ 2" FILL (TYP)
LANDINGS = 12 GA. PL w/ 3" FILL ON 1¼x3/16 BAR GRATING
GUARDRAILS = HSS 2x2x3/16 WITH BAR PICKETS ½x½ AT 4" O.C. MAX.
HANDRAILS = PIPE 1¼ø STD.

DESIGN REF: A-700, A-702
ERECTION DWG. REF: SE110, SE111, SE112, SE113, SE114, SE115, SE116

PRINT RECORD

Date	Quan.	For	Date	Quan.	For
DATE		APPROVAL			
DATE		FIELD USE			

STAIR NO. C02

DATE A

Rev.	Date	Description	By

IRWIN STEEL
15740 Highway 114 ~ Justin, Texas 76247
Phone (817) 636-2508 ~ Fax (817) 636-2506

Job Name: CUSTOM PAN STAIR IN STEEL FRAME
Location: CITY, TEXAS
Customer: CONTRACTOR
Architect: ARCHITECT

DRAWN: THX
CHECKED: HAL
JOB NO: 1138
CAD NO:
SHEET NO. SE117