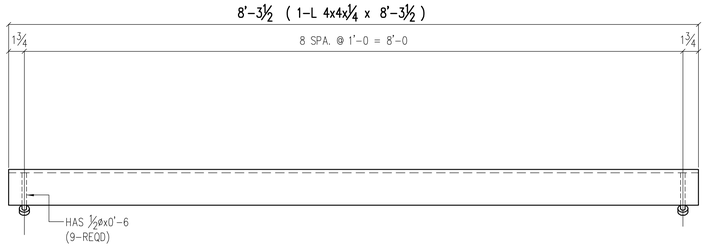

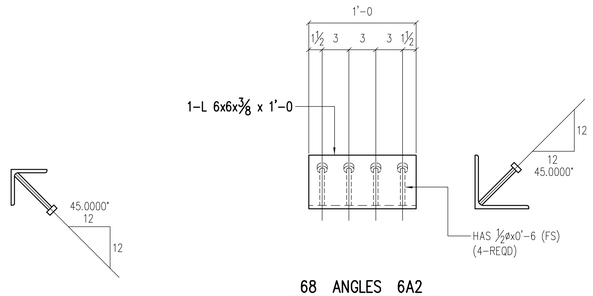

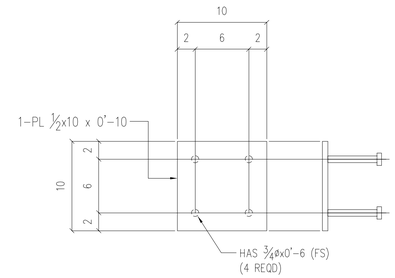

25 ANGLES 6A1

[ONE REQD – STAIR 1 AT LOWER LEVEL ONE]
[ONE REQD – STAIR 1 AT GROUND LEVEL]
[ONE REQD – STAIR 1 AT 1st LEVEL]
[ONE REQD – STAIR 1 AT 2nd LEVEL]
[ONE REQD – STAIR 1 AT 3rd LEVEL]
[ONE REQD – STAIR 1 AT 4th LEVEL]
[ONE REQD – STAIR 1 AT 5th LEVEL]
[ONE REQD – STAIR 1 AT 6th LEVEL]
[ONE REQD – STAIR 1 AT 7th LEVEL]

[ONE REQD – STAIR 2 AT LOWER LEVEL ONE]
[ONE REQD – STAIR 2 AT GROUND LEVEL]
[ONE REQD – STAIR 2 AT 1st LEVEL]
[ONE REQD – STAIR 2 AT 2nd LEVEL]
[ONE REQD – STAIR 2 AT 3rd LEVEL]
[ONE REQD – STAIR 2 AT 4th LEVEL]
[ONE REQD – STAIR 2 AT 5th LEVEL]
[ONE REQD – STAIR 2 AT 6th LEVEL]
[ONE REQD – STAIR 2 AT 7th LEVEL]

[ONE REQD – STAIR 3 AT 1st LEVEL]
[ONE REQD – STAIR 3 AT 2nd LEVEL]
[ONE REQD – STAIR 3 AT 3rd LEVEL]
[ONE REQD – STAIR 3 AT 4th LEVEL]
[ONE REQD – STAIR 3 AT 5th LEVEL]
[ONE REQD – STAIR 3 AT 6th LEVEL]
[ONE REQD – STAIR 3 AT 7th LEVEL]

68 ANGLES 6A2

[2 REQD – STAIR 1 AT LOWER LEVEL ONE]
[4 REQD – STAIR 1 AT GROUND LEVEL]
[4 REQD – STAIR 1 AT 1st LEVEL]
[4 REQD – STAIR 1 AT 2nd LEVEL]
[4 REQD – STAIR 1 AT 3rd LEVEL]
[4 REQD – STAIR 1 AT 4th LEVEL]
[4 REQD – STAIR 1 AT 5th LEVEL]
[4 REQD – STAIR 1 AT 6th LEVEL]
[4 REQD – STAIR 1 AT 7th LEVEL]

[2 REQD – STAIR 2 AT LOWER LEVEL ONE]
[2 REQD – STAIR 2 AT GROUND LEVEL]
[2 REQD – STAIR 2 AT 1st LEVEL]
[2 REQD – STAIR 2 AT 2nd LEVEL]
[2 REQD – STAIR 2 AT 3rd LEVEL]
[2 REQD – STAIR 2 AT 4th LEVEL]
[2 REQD – STAIR 2 AT 5th LEVEL]
[2 REQD – STAIR 2 AT 6th LEVEL]
[2 REQD – STAIR 2 AT 7th LEVEL]
[4 REQD – STAIR 2 AT ROOF LEVEL]

[2 REQD – STAIR 3 AT 2nd LEVEL]
[2 REQD – STAIR 3 AT 3rd LEVEL]
[2 REQD – STAIR 3 AT 4th LEVEL]
[2 REQD – STAIR 3 AT 5th LEVEL]
[2 REQD – STAIR 3 AT 6th LEVEL]
[2 REQD – STAIR 3 AT 7th LEVEL]

2 PLATES 6M1

[2 REQD – STAIR 1 AT LOWER LEVEL 2]

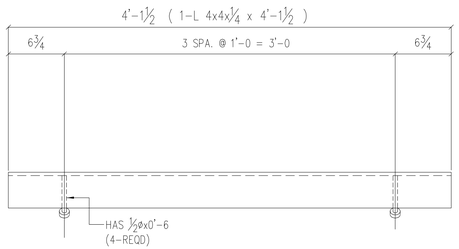

ONE ANGLE 6A3

[ONE REQD – STAIR 2 AT ROOF LEVEL]

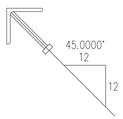

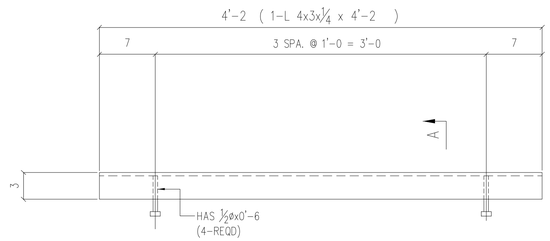

ONE ANGLE 6A5

[ONE REQD – STAIR 2 AT ROOF LEVEL]

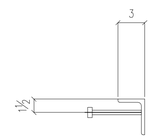

SECTION A

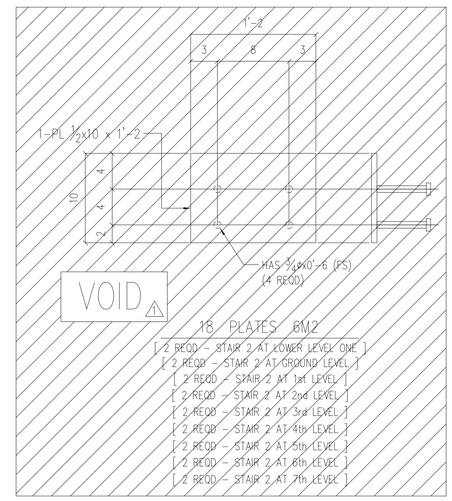

18 PLATES 6M2

[2 REQD – STAIR 2 AT LOWER LEVEL ONE]
[2 REQD – STAIR 2 AT GROUND LEVEL]
[2 REQD – STAIR 2 AT 1st LEVEL]
[2 REQD – STAIR 2 AT 2nd LEVEL]
[2 REQD – STAIR 2 AT 3rd LEVEL]
[2 REQD – STAIR 2 AT 4th LEVEL]
[2 REQD – STAIR 2 AT 5th LEVEL]
[2 REQD – STAIR 2 AT 6th LEVEL]
[2 REQD – STAIR 2 AT 7th LEVEL]

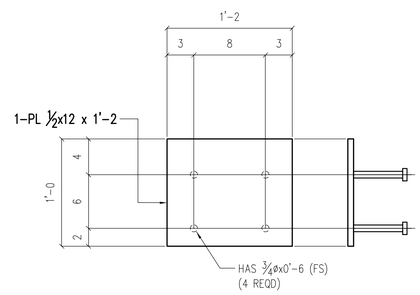

39 PLATES 6M4

[3 REQD – STAIR 2 AT LOWER LEVEL ONE]
[3 REQD – STAIR 2 AT GROUND LEVEL]
[3 REQD – STAIR 2 AT 1st LEVEL]
[3 REQD – STAIR 2 AT 2nd LEVEL]
[3 REQD – STAIR 2 AT 3rd LEVEL]
[3 REQD – STAIR 2 AT 4th LEVEL]
[3 REQD – STAIR 2 AT 5th LEVEL]
[3 REQD – STAIR 2 AT 6th LEVEL]
[3 REQD – STAIR 2 AT 7th LEVEL]

[2 REQD – STAIR 3 AT 2nd LEVEL]
[2 REQD – STAIR 3 AT 3rd LEVEL]
[2 REQD – STAIR 3 AT 4th LEVEL]
[2 REQD – STAIR 3 AT 5th LEVEL]
[2 REQD – STAIR 3 AT 6th LEVEL]
[2 REQD – STAIR 3 AT 7th LEVEL]

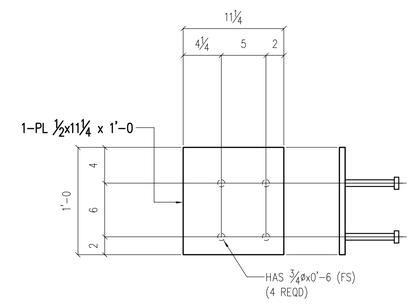

9 PLATES 6M3

[ONE REQD – STAIR 2 AT LOWER LEVEL ONE]
[ONE REQD – STAIR 2 AT GROUND LEVEL]
[ONE REQD – STAIR 2 AT 1st LEVEL]
[ONE REQD – STAIR 2 AT 2nd LEVEL]
[ONE REQD – STAIR 2 AT 3rd LEVEL]
[ONE REQD – STAIR 2 AT 4th LEVEL]
[ONE REQD – STAIR 2 AT 5th LEVEL]
[ONE REQD – STAIR 2 AT 6th LEVEL]
[ONE REQD – STAIR 2 AT 7th LEVEL]

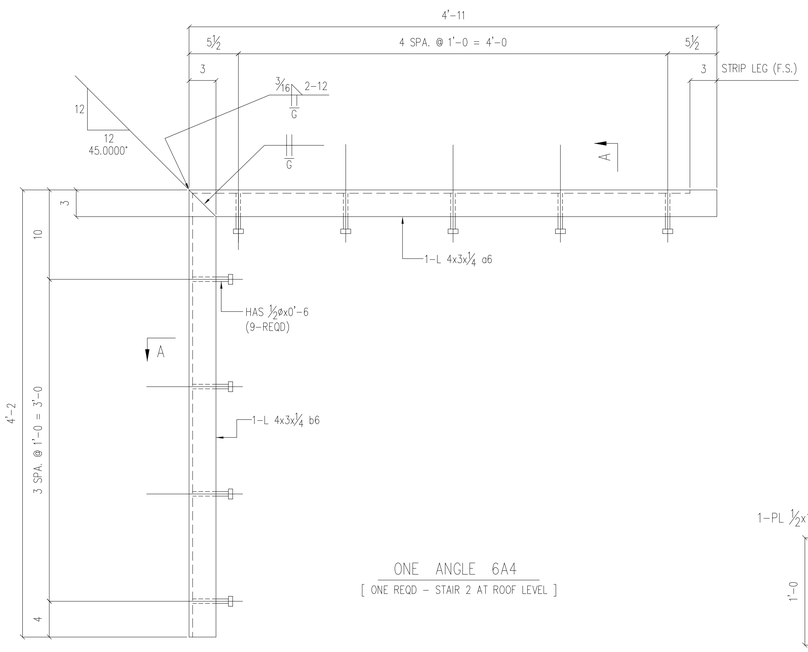

ONE ANGLE 6A4

[ONE REQD – STAIR 2 AT ROOF LEVEL]

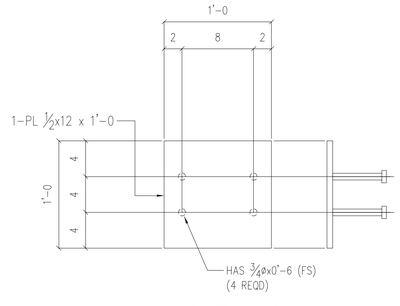

6 PLATES 6M5

[4 REQD – STAIR 3 AT GROUND LEVEL]
[2 REQD – STAIR 3 AT 1st LEVEL]

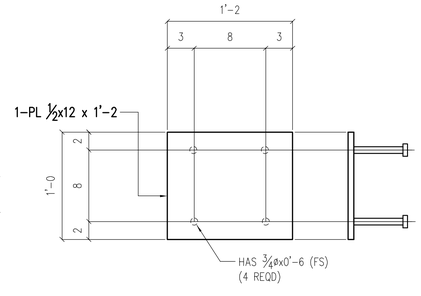

2 PLATES 6M6

[2 REQD – STAIR 3 AT FIRST LEVEL]

Line	Mark	No.	Tot	Description	Length Ft	Length In	Piece Mark	Remarks	Weight	Order Item
1	6A1	25		ANGLES						
2		1	25	L 4x4x¼	8	3½				
3		9	225	HAS ½ø	0	6		A108		
4										
5	6A2	68		ANGLES						
6		1	68	L 6x6x⅜	1	0				
7		4	272	HAS ½ø	0	6		A108		
8										
9	6A3	1		ANGLE						
10		1	1	L 4x4x¼	4	1½				
11		4	4	HAS ½ø	0	6		A108		
12										
13	6A4	1		ANGLE						
14		1	1	L 4x3x¼	4	11	a6			
15		1	1	L 4x3x¼	4	2	b6			
16		9	9	HAS ½ø	0	6		A108		
17										
18	6A5	1		ANGLE						
19		1	1	L 4x3x¼	4	2				
20		4	4	HAS ½ø	0	6		A108		
21										
22	6M1	2		PLATES						
23		1	2	PL ½x10	0	10				
24		4	8	HAS ¾ø	0	6		A108		
25										
26	6M2	18		PLATES						
27		1	18	PL ½x10	1	2				
28		4	72	HAS ¾ø	0	6		A108		
29										
30	6M3	9		PLATES						
31		1	9	PL ½x11¼	1	0				
32		4	36	HAS ¾ø	0	6		A108		
33										
34	6M4	39		PLATES						
35		1	39	PL ½x12	1	2				
36		4	156	HAS ¾ø	0	6		A108		
37										
38	6M5	6		PLATES						
39		1	6	PL ½x12	1	0				
40		4	24	HAS ¾ø	0	6		A108		
41										
42	6M6	2		PLATES						
43		1	2	PL ½x12	1	2				
44		4	8	HAS ¾ø	0	6		A108		
45										
46										
47										
48										
49										
50										
51										

VOID

SHOP NOTES

1. ALL STEEL A36 U.N.

PAINT: NONE

EMBEDS AT STAIR NO. ONE – AREA ONE
EMBEDS AT STAIR NO. 2 – AREA 2
EMBEDS AT STAIR NO. 3 – AREA 3

S

Rev.	Date	Description	By

IRWIN STEEL
15740 Highway 114 ~ Justin, Texas 76247
Phone (817) 636-2508 ~ Fax (817) 636-2506

ERECTION DRAWING REF. (STAIR NO. 2): SE20, SE21

PRINT RECORD

Date	Quan.	For	Date	Quan.	For
		APPROVAL			
		SHOP			

Job Name:
Location:
Customer:
Architect:

DRAWN:	JOB NO:	SHEET NO.
CHECKED:	CAD NO:	6