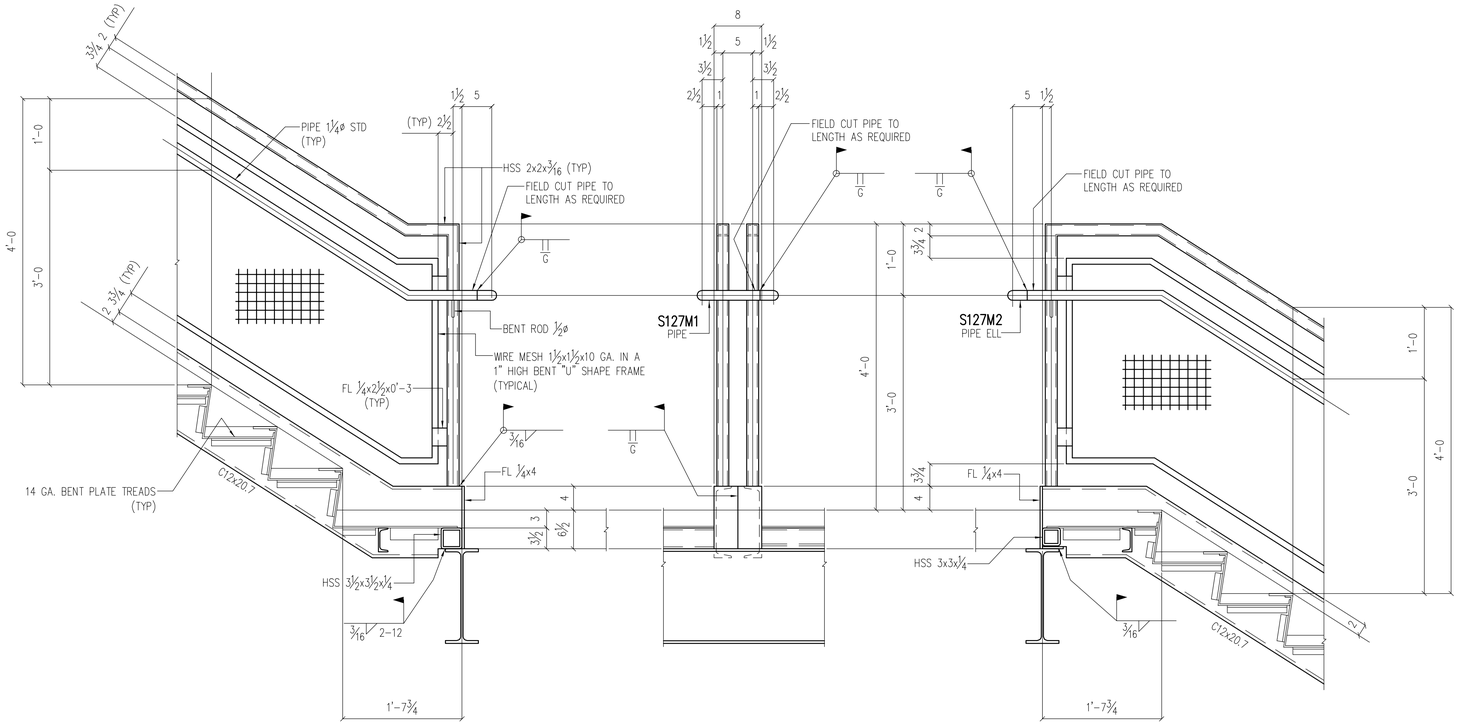

SECTION A/SE108
[E102]

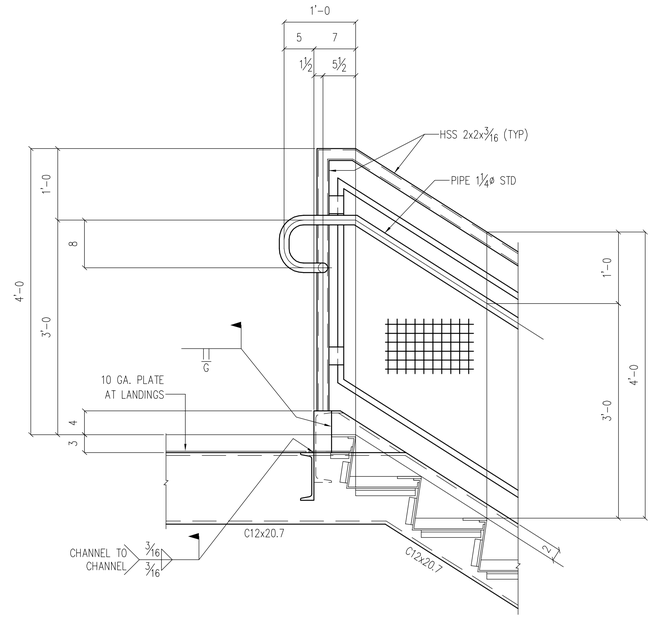

SECTION B/SE108
[SE102]

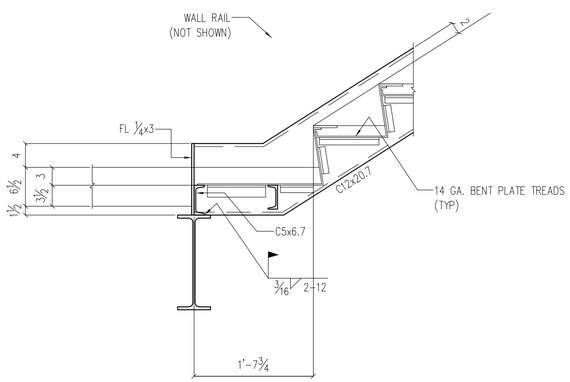

SECTION C/SE108
[SE101]

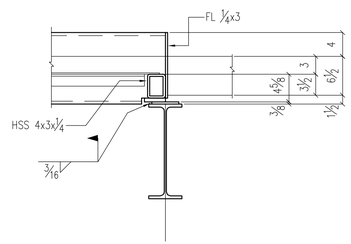

SECTION D/SE108
[SE101]

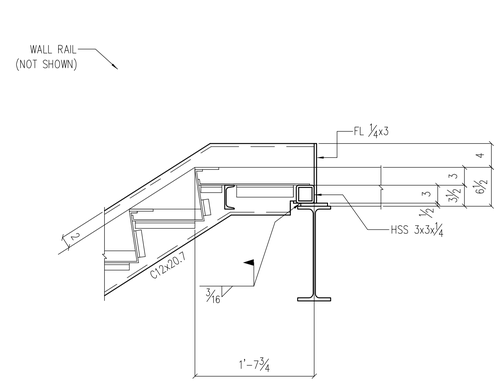

SECTION F/SE108
[SE102]

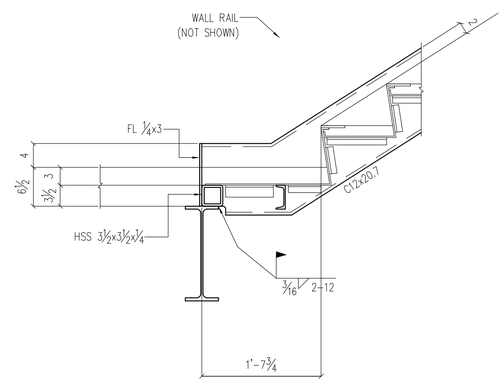

SECTION G/SE108
[SE102]

STAIR NO. 2 - AREA A

DATE
F

Rev.	Date	Description	By

IRWIN STEEL
15740 Highway 114 ~ Justin, Texas 76247
Phone (817) 636-2508 ~ Fax (817) 636-2506

REF: A702

PRINT RECORD

Date	Quan.	For	Date	Quan.	For
DATE		APPROVAL			
DATE		FIELD USE			

Job Name: STANDARD PAN STAIR IN STEEL FRAME
Location: CITY, TEXAS
Customer: CONTRACTOR
Architect: ARCHITECT

DRAWN: THX
CHECKED: HAL
JOB NO: 1138
CAD NO:
SHEET NO. SE108