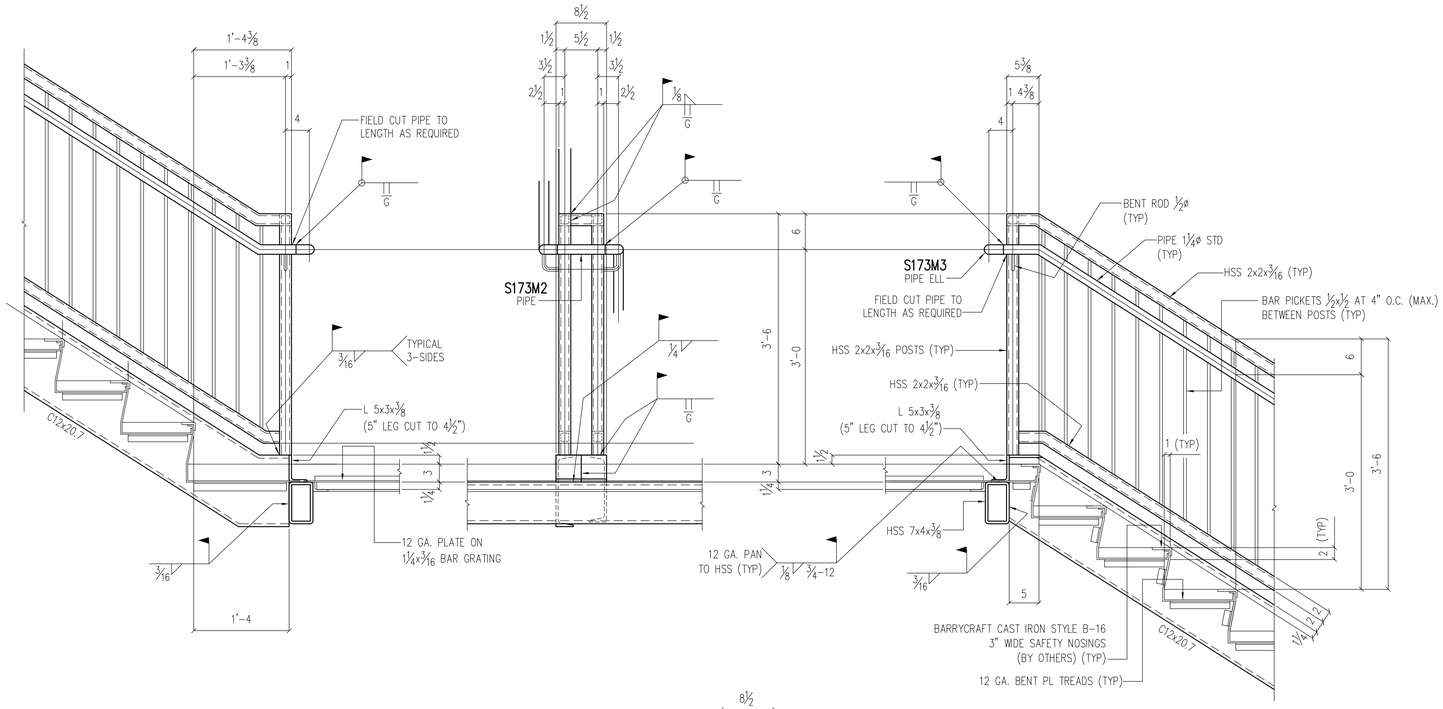

SECTION A/SE115

[SE110, SE111]

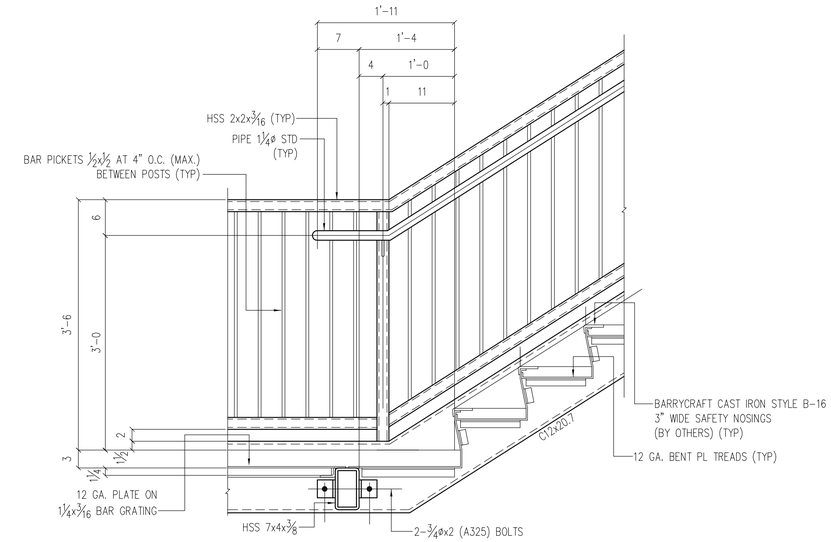

SECTION C/SE115

[SE110, SE111]

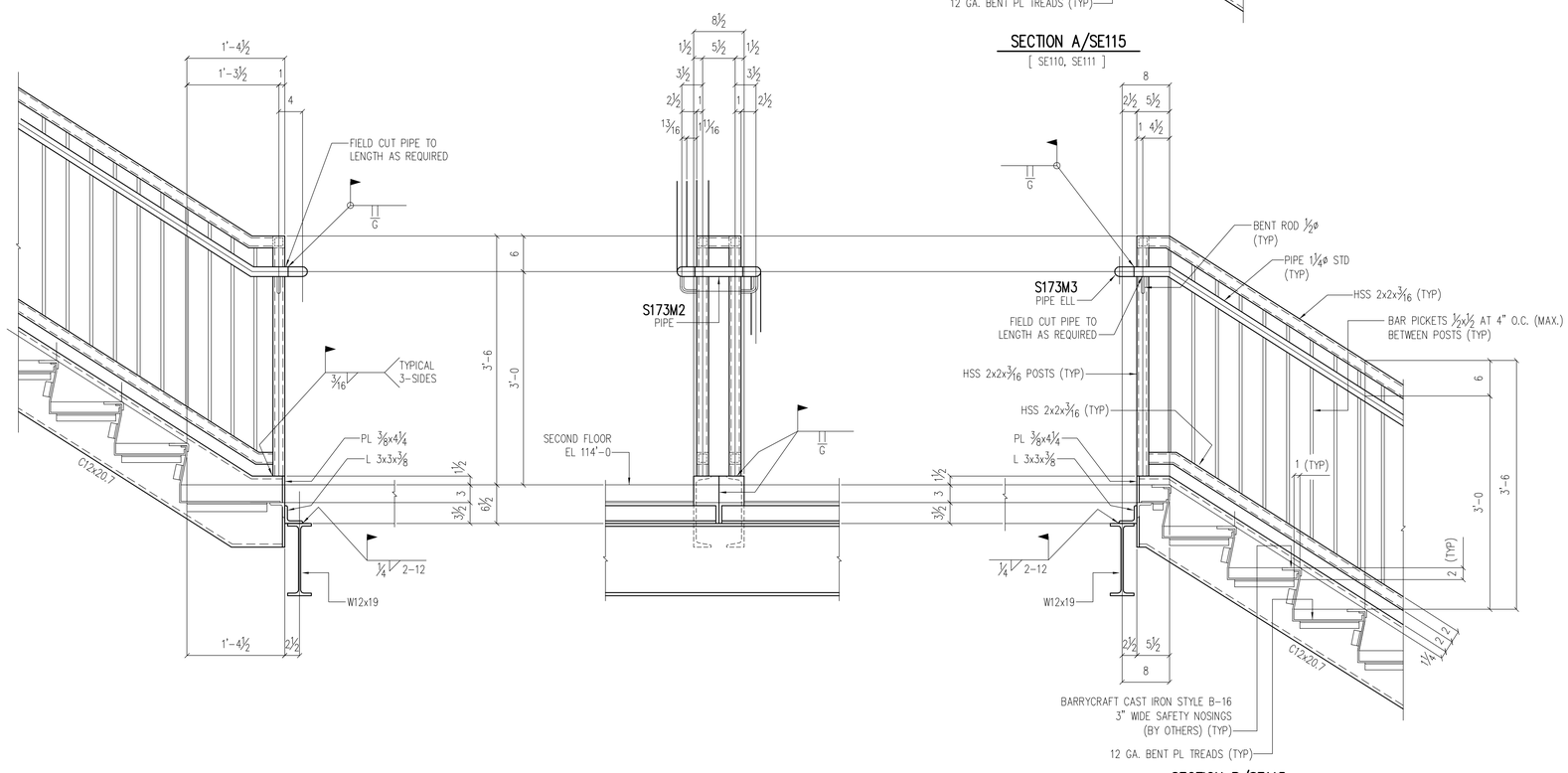

SECTION B/SE115

[SE110]

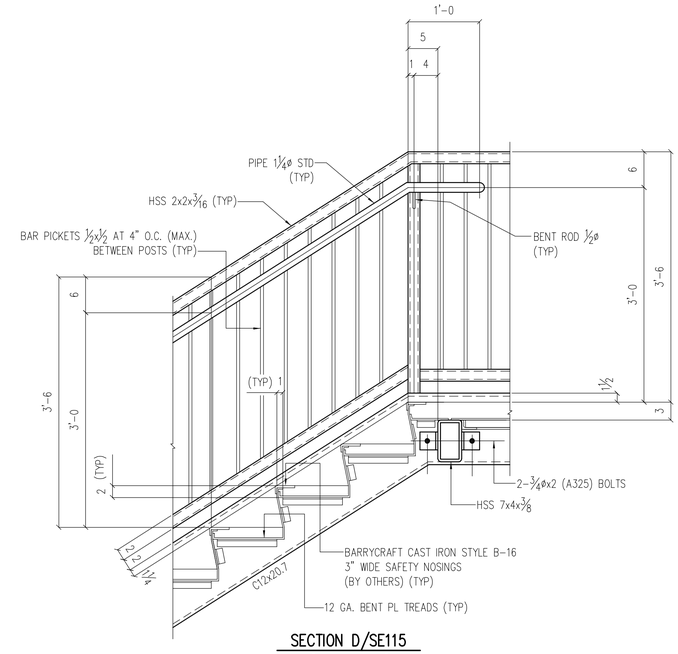

SECTION D/SE115

[SE110, SE111]

STAIR NO. C02

DATE A

Rev.	Date	Description	By

IRWIN STEEL

15740 Highway 114 ~ Justin, Texas 76247

Phone (817) 636-2508 ~ Fax (817) 636-2506

DESIGN REF: A-700, A-702

ERECTION DWG. REF: SE110, SE111, SE112, SE113, SE114, SE116, SE117

STAIR NOTES

STRINGERS = C12x20.7

HEADERS = HSS 7x4x3/8

TREADS = 12 GA. PL W/ 2" FILL (TYP)

LANDINGS = 12 GA. PL w/ 3" FILL ON 1¼x3/16 BAR GRATING

GUARDRAILS = HSS 2x2x3/16 WITH BAR PICKETS ½x½ AT 4" O.C. MAX.

HANDRAILS = PIPE 1¼ø STD.

PRINT RECORD

Date	Quan.	For	Date	Quan.	For
DATE		APPROVAL			
DATE		FIELD USE			

Job Name:	CUSTOM PAN STAIR IN STEEL FRAME
Location:	CITY, TEXAS
Customer:	CONTRACTOR
Architect:	ARCHITECT

DRAWN: THX	JOB NO: 1138	SHEET NO. SE115
CHECKED: HAL	CAD NO:	